NuKeeper NKS 1 & 2 R

NKS 1 & 2 R Exploded Details

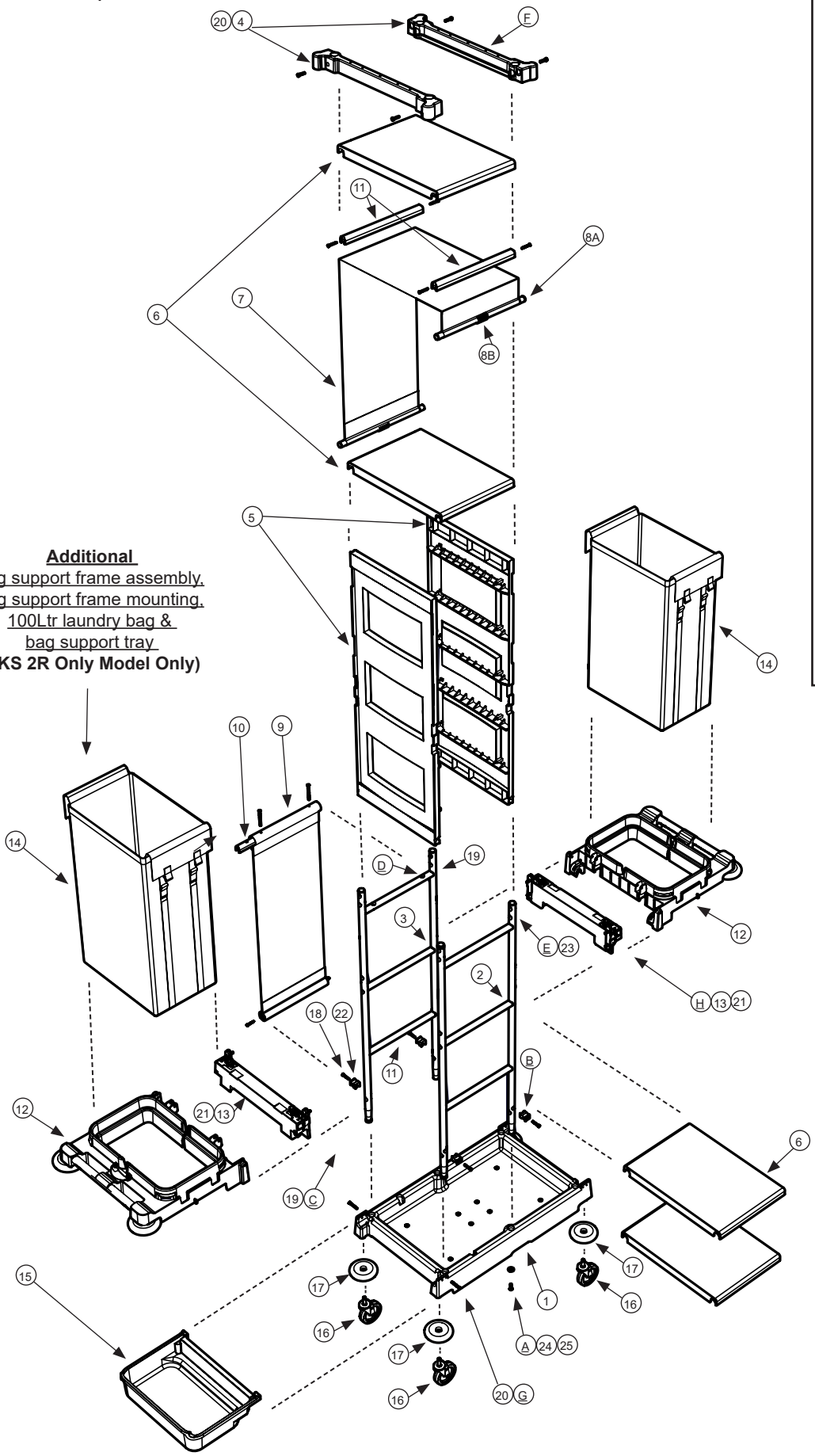

Additional
Bag support frame assembly,
Bag support frame mounting,
100Ltr laundry bag &
bag support tray
(NKS 2R Only Model Only)

Detail Views A To K

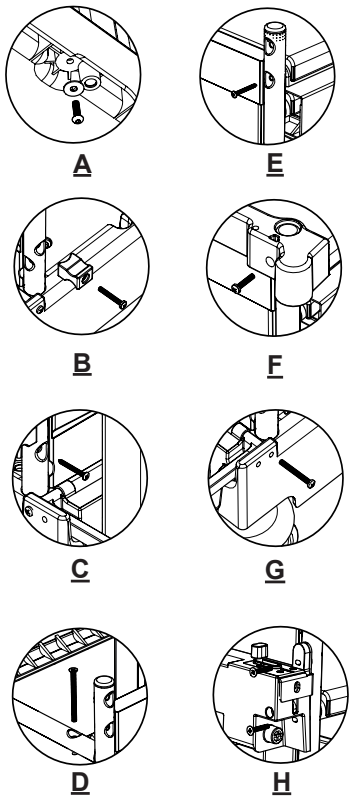

Notes:-

1. See page 2 of 2 for items list and part numbers.

Item Number	Item Description	Part Number	Quanity	Trolley Model
1	Large black reflo trolley base	910010	1	NKS 1 & 2 R
2	Front upright weld assembly mild steel painted silver	906524	1	NKS 1 & 2 R
3	Rear upright weld assembly mild steel painted silver	906523	1	NKS 1 & 2 R
4	Door mounting black	913168	2	NKS 1 & 2 R
5	Panel tall (black)	913169	2	NKS 1 & 2 R
6	Shelf (Narrow)	223105	4	NKS 1 & 2 R
7	Sliding Cover Assembly	906995	1	NKS 1 & 2 R
8A	Cover pull tube painted silver (380mm)	906532	2	NKS 1 & 2 R
8B	19mm Diameter tube profile x 40mm long	206495	2	NKS 1 & 2 R
9	Servokeeper rear cover (Single)	206308	1	NKS 1 & 2 R
10	Tie-bar dark grey short (Nylon)	223117	1	NKS 1 & 2 R
11	Tie-bar dark grey plain short (Nylon)	223116	3	NKS 1 & 2 R
12	Bag support frame assembly (Black)	910708	1	NKS 1 & 2 R
13	Bag support frame mounting moulding (Black reflo)	910707	1	NKS 1 & 2 R
14	100 Ltr Heavy duty laundry bag (Grey)	918001	1	NKS 1 & 2 R
16	4 Inch stem fitting castor	204062	4	NKS 1 & 2 R
17	Buffer moulding	204030	4	NKS 1 & 2 R
18	Mounting Block Moulding	223212	4	NKS 1 & 2 R
19	No.8 1 & 1/2 Inch long raised countersunk self tap screw	219839	-	NKS 1 & 2 R
20	M5 x 25mm Long pozi pan screw	219057	-	NKS 1 & 2 R
21	M5 x 30mm Pozi countersunk Z/PL screw	904520	-	NKS 1 & 2 R
22	M5 x 35mm Long pozi pan screw	220033	-	NKS 1 & 2 R
23	M6 x 70mm Long pozi pan countersunk screw	219422	-	NKS 1 & 2 R
24	M8 x 25mm Long socket bolt	219555	-	NKS 1 & 2 R
25	M8 Washer	221154	-	NKS 1 & 2 R

NKS 2 R **Additional** Items Table & Part Numbers

12	Bag support frame assembly (Black)	910708	1	NKS 2 R ONLY
13	Bag support frame mounting moulding (Black reflo)	910707	1	NKS 2 R ONLY
14	100 Ltr heavy duty laundry bag (Grey)	918001	1	NKS 2 R ONLY
15	Bag support tray (Black Reflo)	910372	1	NKS 2 R ONLY

Numatic International Limited (Head Office)
Chard, Somerset TA20 2GB, UNITED KINGDOM
Tel: 01460 68600 numatic.com

Numatic International GmbH
Fränkische Straße 15-19, 30455 Hannover,
DEUTSCHLAND Tel: +49 (0) 511 984 2160 numatic.de

Numatic International Denmark
Fränkische Straße 15-19, 30455 Hannover, DEUTSCHLAND
Tel: +45 (0) 316 40808 numatic-online.dk

Numatic International S.A.S
13/17 rue du Valengelier, EAE la Tuilerie, 77500 Chelles, FRANCE
Tel: +33 (0) 164 726 161 numatic.fr

Numatic International BV
Vennootsweg 15, 2404 CG, Alphen aan den Rijn, NEDERLAND
Tel: +31 (0) 172 467 999 numatic.nl

Numatic International Schweiz AG.
Sihlbruggstrasse 3A, 6340 Baar, SCHWEIZ
Tel: +41 (0) 41 768 0760 numatic.ch

Numatic International (PTY) Ltd.
Cnr. 16th & Pharmaceutical Road, Randjes Park,
Midrand 1685, SOUTH AFRICA
Tel: +27 (0) 861 686 284 numatic.co.za

Numatic International ULDA
Rua Francisco da Silva Duarte, nº79,
4475-269 Santa Maria de Avioso, Castêlo da Maia, PORTUGAL
Tel: +351 220 047 700 numatic.pt

Numatic International Spain, S.L.U.
Av. Baix Llobregat, 5-7, Oficina bajos 1 (Parc Negocis Mas Blau II)
08820 El Prat de Llobregat (Barcelona), SPAIN
Tel: +34 93 647 22 22 numatic.es

Numatic International Italy S.R.L
Via Luigi Galvani, 2, Z.I. Talponedo, 33080 Porcia (PN), ITALY
Tel: +39 (0) 434 046 211 numatic.it

Edco, Edgar Edmondson Pty Ltd
Head Office: PO Box 198, Marrickville, NSW 1475, AUSTRALIA
Delivery & Shipping Address
18 Garden St, Marrickville, NSW 2204, AUSTRALIA
Office Number: +61 (0)2 9557 4411, Fax Number: +61 (0)2 9519 9223,
Email: orders@edmondson.net.au ABN: 27 000 450 144

Proquip NZ Ltd
7a Peterkin Street, Taita, Lower Hutt, 5019
Tel: +64 4 566 7847, Fax: +64 4 576 0430
Web: www.proquipnz.co.nz

©Numatic International Limited 2025. Specification subject to change without prior notice. numatic.com

EXP-002015 05/25 (A03)